vapour to be obtained that is substantially richer in the more volatile component than is the liquid left in the still. This is achieved by an arrangement known as a fractionating column which enables successive vaporisation and condensation to be accomplished in one unit. Detailed consideration of this process is given in Section 11.4.

11.3.4. Batch distillation

In batch distillation, which is considered in detail in Section 11.6, the more volatile component is evaporated from the still which therefore becomes progressively richer in the less volatile constituent. Distillation is continued, either until the residue of the still contains a material with an acceptably low content of the volatile material, or until the distillate is no longer sufficiently pure in respect of the volatile content.

11.4. THE FRACTIONATING COLUMN

11.4.1. The fractionating process

The operation of a typical fractionating column may be followed by reference to Figure 11.11. The column consists of a cylindrical structure divided into sections by

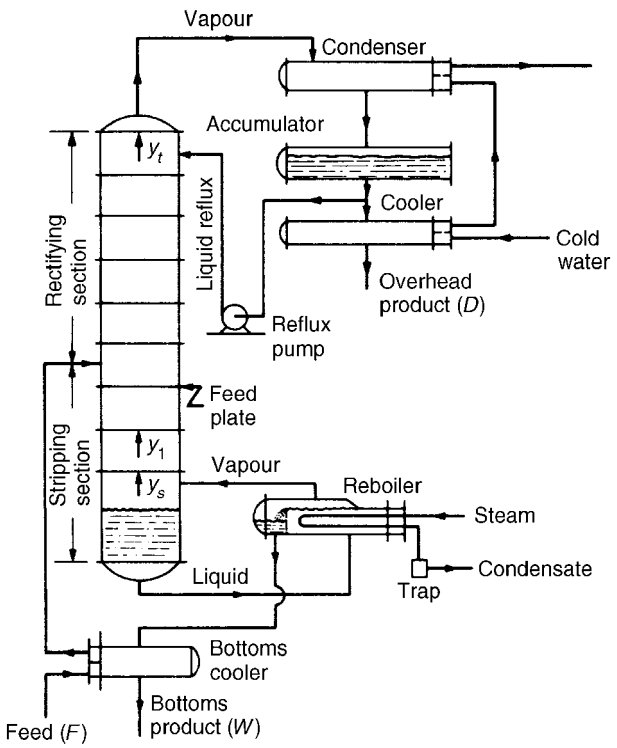

Figure 11.11. Continuous fractionating column with rectifying and stripping sections

a series of perforated trays which permit the upward flow of vapour. The liquid reflux flows across each tray, over a weir and down a downcomer to the tray below. The vapour rising from the top tray passes to a condenser and then through an accumulator or reflux drum and a reflux divider, where part is withdrawn as the overhead product D, and the remainder is returned to the top tray as reflux R.

The liquid in the base of the column is frequently heated, either by condensing steam or by a hot oil stream, and the vapour rises through the perforations to the bottom tray. A more commonly used arrangement with an external reboiler is shown in Figure 11.11 where the liquid from the still passes into the reboiler where it flows over the tubes and weir and leaves as the bottom product by way of a bottoms cooler, which preheats the incoming feed. The vapour generated in the reboiler is returned to the bottom of the column with a composition y_s, and enters the bottom tray where it is partially condensed and then revaporised to give vapour of composition y_1. This operation of partial condensation of the rising vapour and partial vaporisation of the reflux liquid is repeated on each tray. Vapour of composition y_t from the top tray is condensed to give the top product D and the reflux R, both of the same composition y_t. The feed stream is introduced on some intermediate tray where the liquid has approximately the same composition as the feed. The part of the column above the feed point is known as the rectifying section and the lower portion is known as the stripping section. The vapour rising from an ideal tray will be in equilibrium with the liquid leaving, although in practice a smaller degree of enrichment will occur.

In analysing the operation on each tray it is important to note that the vapour rising to it, and the reflux flowing down to it, are not in equilibrium, and adequate rates of mass and heat transfer are essential for the proper functioning of the tray.

The tray as described is known as a sieve tray and it has perforations of up to about 12 mm diameter, although there are several alternative arrangements for promoting mass transfer on the tray, such as valve units, bubble caps and other devices described in Section 11.10.1. In all cases the aim is to promote good mixing of vapour and liquid with a low drop in pressure across the tray.

On each tray the system tends to reach equilibrium because:

(a) Some of the less volatile component condenses from the rising vapour into the liquid thus increasing the concentration of the more volatile component (MVC) in the vapour.
(b) Some of the MVC is vaporised from the liquid on the tray thus decreasing the concentration of the MVC in the liquid.

The number of molecules passing in each direction from vapour to liquid and in reverse is approximately the same since the heat given out by one mole of the vapour on condensing is approximately equal to the heat required to vaporise one mole of the liquid. The problem is thus one of equimolecular counterdiffusion, described in Volume 1, Chapter 10. If the molar heats of vaporisation are approximately constant, the flows of liquid and vapour in each part of the column will not vary from tray to tray. This is the concept of constant molar overflow which is discussed under the heat balance heading in Section 11.4.2. Conditions of varying molar overflow, arising from unequal molar latent heats of the components, are discussed in Section 11.5.

In the arrangement discussed, the feed is introduced continuously to the column and two product streams are obtained, one at the top much richer than the feed in the MVC and the second from the base of the column weaker in the MVC. For the separation of small quantities of mixtures, a batch still may be used. Here the column rises directly from a large drum which acts as the still and reboiler and holds the charge of feed. The trays in the column form a rectifying column and distillation is continued until it is no longer possible to obtain the desired product quality from the column. The concentration of the MVC steadily falls in the liquid remaining in the still so that enrichment to the desired level of the MVC is not possible. This problem is discussed in more detail in Section 11.6.

A complete unit will normally consist of a feed tank, a feed heater, a column with boiler, a condenser, an arrangement for returning part of the condensed liquid as reflux, and coolers to cool the two products before passing them to storage. The reflux liquor may be allowed to flow back by gravity to the top plate of the column or, as in larger units, it is run back to a drum from which it is pumped to the top of the column. The control of the reflux on very small units is conveniently effected by hand-operated valves, and with the larger units by adjusting the delivery from a pump. In many cases the reflux is divided by means of an electromagnetically operated device which diverts the top product either to the product line or to the reflux line for controlled time intervals.

11.4.2. Number of plates required in a distillation column

In order to develop a method for the design of distillation units to give the desired fractionation, it is necessary, in the first instance, to develop an analytical approach which enables the necessary number of trays to be calculated. First the heat and material flows over the trays, the condenser, and the reboiler must be established. Thermodynamic data are required to establish how much mass transfer is needed to establish equilibrium between the streams leaving each tray. The required diameter of the column will be dictated by the necessity to accommodate the desired flowrates, to operate within the available drop in pressure, while at the same time effecting the desired degree of mixing of the streams on each tray.

Four streams are involved in the transfer of heat and material across a plate, as shown in Figure 11.12 in which plate n receives liquid L_{n+1} from plate $n+1$ above, and vapour V_{n-1} from plate $n-1$ below. Plate n supplies liquid L_n to plate $n-1$, and vapour V_n to plate $n+1$.

The action of the plate is to bring about mixing so that the vapour V_n, of composition y_n, approaches equilibrium with the liquid L_n, of composition x_n. The streams L_{n+1} and V_{n-1} cannot be in equilibrium and, during the interchange process on the plate, some of the more volatile component is vaporised from the liquid L_{n+1}, decreasing its concentration to x_n, and some of the less volatile component is condensed from V_{n-1}, increasing the vapour concentration to y_n. The heat required to vaporise the more volatile component from the liquid is supplied by partial condensation of the vapour V_{n-1}. Thus the resulting effect is that the more volatile component is passed from the liquid running down the column to the vapour rising up, whilst the less volatile component is transferred in the opposite direction.

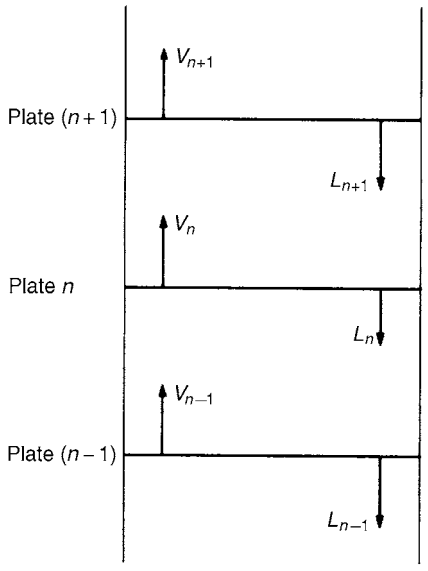

Figure 11.12. Material balance over a plate

Heat balance over a plate

A heat balance across plate n may be written as:

$$L_{n+1}H^L_{n+1} + V_{n-1}H^V_{n-1} = V_n H^V_n + L_n H^L_n + \text{losses} + \text{heat of mixing} \tag{11.32}$$

where: H^L_n is the enthalpy per mole of the liquid on plate n, and
H^V_n is the enthalpy per mole of the vapour rising from plate n.

This equation is difficult to handle for the majority of mixtures, and some simplifying assumptions are usually made. Thus, with good lagging, the heat losses will be small and may be neglected, and for an ideal system the heat of mixing is zero. For such mixtures, the molar heat of vaporisation may be taken as constant and independent of the composition. Thus, one mole of vapour V_{n-1} on condensing releases sufficient heat to liberate one mole of vapour V_n. It follows that $V_n = V_{n-1}$, so that the molar vapour flow is constant up the column unless material enters or is withdrawn from the section. The temperature change from one plate to the next will be small, and H^L_n may be taken as equal to H^L_{n+1}. Applying these simplifications to equation 11.32, it is seen that $L_n = L_{n+1}$, so that the moles of liquid reflux are also constant in this section of the column. Thus V_n and L_n are constant over the rectifying section, and V_m and L_m are constant over the stripping section.

For these conditions there are two basic methods for determining the number of plates required. The first is due to Sorel[25] and later modified by Lewis[26], and the second is due to McCabe and Thiele[27]. The Lewis method is used here for binary systems, and also in Section 11.7.4 for calculations involving multicomponent mixtures. This method is also the basis of modern computerised methods. The McCabe–Thiele method is particularly

important since it introduces the idea of the operating line which is an important common concept in multistage operations. The best assessment of these methods and their various applications is given by UNDERWOOD[28].

When the molar heat of vaporisation varies appreciably and the heat of mixing is no longer negligible, these methods have to be modified, and alternative techniques are discussed in Section 11.5.

Calculation of number of plates using the Lewis–Sorel method

If a unit is operating as shown in Figure 11.13, so that a binary feed F is distilled to give a top product D and a bottom product W, with x_f, x_d, and x_w as the corresponding mole fractions of the more volatile component, and the vapour V_t rising from the top plate is condensed, and part is run back as liquid at its boiling point to the column as reflux, the remainder being withdrawn as product, then a material balance above plate n, indicated by the loop I in Figure 11.13 gives:

$$V_n = L_{n+1} + D \tag{11.33}$$

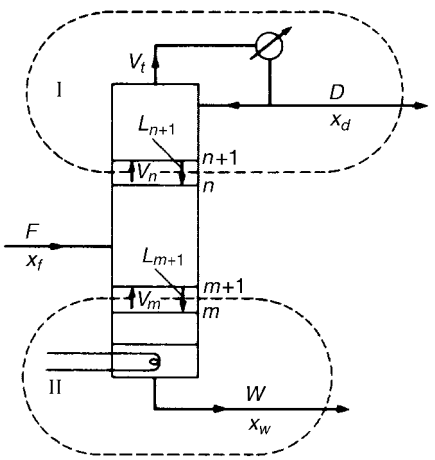

Figure 11.13. Material balances at top and bottom of column

Expressing this balance for the more volatile component gives:

$$y_n V_n = L_{n+1} x_{n+1} + D x_d$$

Thus:

$$y_n = \frac{L_{n+1}}{V_n} x_{n+1} + \frac{D}{V_n} x_d \tag{11.34}$$

This equation relates the composition of the vapour rising to the plate to the composition of the liquid on any plate above the feed plate. Since the molar liquid overflow is constant, L_n may be replaced by L_{n+1} and:

$$y_n = \frac{L_n}{V_n} x_{n+1} + \frac{D}{V_n} x_d \tag{11.35}$$

Similarly, taking a material balance for the total streams and for the more volatile component from the bottom to above plate m, as indicated by the loop II in Figure 11.13, and noting that $L_m = L_{m+1}$ gives:

$$L_m = V_m + W \tag{11.36}$$

and:

$$y_m V_m = L_m x_{m+1} - W x_w$$

Thus:

$$y_m = \frac{L_m}{V_m} x_{m+1} - \frac{W}{V_m} x_w \tag{11.37}$$

This equation, which is similar to equation 11.35, gives the corresponding relation between the compositions of the vapour rising to a plate and the liquid on the plate, for the section below the feed plate. These two equations are the equations of the operating lines.

In order to calculate the change in composition from one plate to the next, the equilibrium data are used to find the composition of the vapour above the liquid, and the enrichment line to calculate the composition of the liquid on the next plate. This method may then be repeated up the column, using equation 11.37 for sections below the feed point, and equation 11.35 for sections above the feed point.

Example 11.7

A mixture of benzene and toluene containing 40 mole per cent benzene is to be separated to give a product containing 90 mole per cent benzene at the top, and a bottom product containing not more than 10 mole per cent benzene. The feed enters the column at its boiling point, and the vapour leaving the column which is condensed but not cooled, provides reflux and product. It is proposed to operate the unit with a reflux ratio of 3 kmol/kmol product. It is required to find the number of theoretical plates needed and the position of entry for the feed. The equilibrium diagram at 100 kN/m^2 is shown in Figure 11.14.

Solution

For 100 kmol of feed, an overall mass balance gives:

$$100 = D + W$$

A balance on the MVC, benzene, gives:

$$(100 \times 0.4) = 0.9\ D + 0.1\ W$$

Thus:

$$40 = 0.9(100 - W) + 0.1\ W$$

and:

$$W = 62.5 \quad \text{and} \quad D = 37.5 \text{ kmol}$$

Using the notation of Figure 11.13 then:

$$L_n = 3D = 112.5$$

and:

$$V_n = L_n + D = 150$$

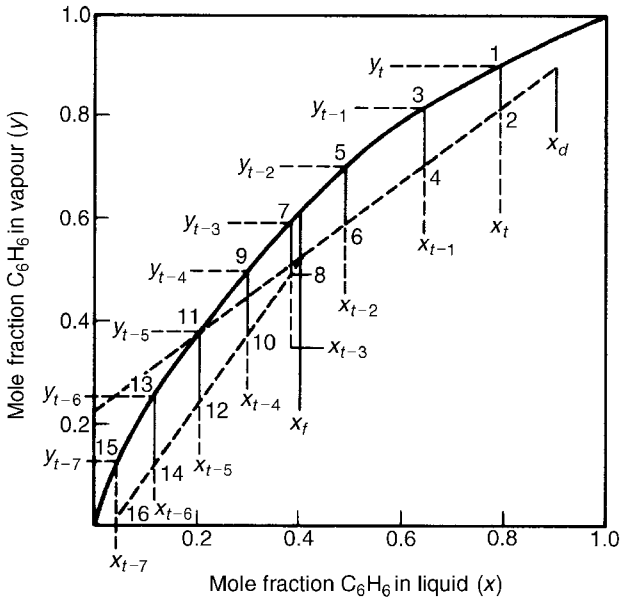

Figure 11.14. Calculation of the number of plates by the Lewis–Sorel method for Example 11.7

Thus, the top operating line from equation 11.35 is:

$$y_n = \left(\frac{112.5}{150}\right) x_{n+1} + \frac{(37.5 \times 0.9)}{150}$$

or:

$$y_n = 0.75x_{n+1} + 0.225 \qquad \text{(i)}$$

Since the feed is all liquid at its boiling point, this will all run down as increased reflux to the plate below.

Thus:

$$L_m = L_n + F$$
$$= (112.5 + 100) = 212.5$$

Also:

$$V_m = L_m - W$$
$$= 212.5 - 62.5 = 150 = V_n$$

Thus:

$$y_m = \left(\frac{212.5}{150}\right) x_{m+1} - \left(\frac{62.5}{150}\right) \times 0.1 \qquad \text{(equation 11.37)}$$

or:

$$y_m = 1.415x_{m+1} - 0.042 \qquad \text{(ii)}$$

With the two equations (i) and (ii) and the equilibrium curve, the composition on the various plates may be calculated by working either from the still up to the condenser, or in the reverse direction. Since all the vapour from the column is condensed, the composition of the vapour y_t from the top plate must equal that of the product x_d, and that of the liquid returned as reflux x_r. The composition x_t of the liquid on the top plate is found from the equilibrium curve and, since it is in equilibrium with vapour of composition, $y_t = 0.90$, $x_t = 0.79$.

The value of y_{t-1} is obtained from equation (i) as:

$$y_{t-1} = (0.75 \times 0.79) + 0.225 = (0.593 + 0.225) = 0.818$$

x_{t-1} is obtained from the equilibrium curve as 0.644

$$y_{t-2} = (0.75 \times 0.644) + 0.225 = (0.483 + 0.225) = 0.708$$

x_{t-2} from equilibrium curve = 0.492

$$y_{t-3} = (0.75 \times 0.492) + 0.225 = (0.369 + 0.225) = 0.594$$

x_{t-3} from the equilibrium curve = 0.382

This last value of composition is sufficiently near to that of the feed for the feed to be introduced on plate $(t - 3)$. For the lower part of the column, the operating line equation (ii) will be used.

Thus:

$$y_{t-4} = (1.415 \times 0.382) - 0.042 = (0.540 - 0.042) = 0.498$$

x_{t-4} from the equilibrium curve = 0.298

$$y_{t-5} = (1.415 \times 0.298) - 0.042 = (0.421 - 0.042) = 0.379$$

x_{t-5} from the equilibrium curve = 0.208

$$y_{t-6} = (1.415 \times 0.208) - 0.042 = (0.294 - 0.042) = 0.252$$

x_{t-6} from the equilibrium curve = 0.120

$$y_{t-7} = (1.415 \times 0.120) - 0.042 = (0.169 - 0.042) = 0.127$$

x_{t-7} from the equilibrium curve = 0.048

This liquid x_{t-7} is slightly weaker than the minimum required and it may be withdrawn as the bottom product. Thus, x_{t-7} will correspond to the reboiler, and there will be seven plates in the column.

The method of McCabe and Thiele

The simplifying assumptions of constant molar heat of vaporisation, no heat losses, and no heat of mixing, lead to a constant molar vapour flow and a constant molar reflux flow in any section of the column, that is $V_n = V_{n+1}$, $L_n = L_{n+1}$, and so on. Using these simplifications, the two enrichment equations are obtained:

$$y_n = \frac{L_n}{V_n} x_{n+1} + \frac{D}{V_n} x_d \qquad \text{(equation 11.35)}$$

and:

$$y_m = \frac{L_m}{V_m} x_{m+1} - \frac{W}{V_m} x_w \qquad \text{(equation 11.37)}$$

These equations are used in the Lewis–Sorel method to calculate the relation between the composition of the liquid on a plate and the composition of the vapour rising to that plate. McCabe and Thiele[27] pointed out that, since these equations represent straight lines connecting y_n with x_{n+1} and y_m with x_{m+1}, they can be drawn on the same diagram as the equilibrium curve to give a simple graphical solution for the number of stages required. Thus, the line of equation 11.35 will pass through the points 2, 4 and 6 shown