Republic of Iraq

Ministry of Higher Education

and Scientific Research

Al-Mustaqbal University College

Chemical Engineering and Petroleum Industries Department

Subject: Energy and Energy Balances

2nd Class

Lecture Four

1.3 Enthalpy Calculations

Change in enthalpy can occur because of change in temperature, change in phase, or mixing of solutions and reactions.

1.3.1 Enthalpy Change as a Result of Temperature

Sensible heat is the heat transferred to raise or lower the temperature of a material in the absence of phase change. In the energy balance calculations, sensible heat change is determined by using a property of matter called the heat capacity at constant pressure, or just heat capacity (*C*P). Units for *C*P are (J/mol/K) or (cal/g/°C). Appendix A.2 lists *C*P values for several organic and inorganic compounds. There are several methods for calculating enthalpy change using *C*P values. When *C*P is constant, the change in the enthalpy of a substance due to change in temperature at constant pressure is given by

$$\Delta H = mC_P(T - T_{ref}) \qquad \text{.....(1.21)}$$

Heat capacities for most substances vary with temperature where the values of *C*P vary for the range of the change in temperature. Heat capacities are tabulated as polynomial functions of temperature such as

$$C_P = a + bT + cT^2 + dT^3 \qquad \text{.....(1.22)}$$

Coefficients *a*, *b*, *c*, and *d* for a number of substances are given in Appendix A.2 In this case, the enthalpy change is

$$\Delta \dot{H} = \dot{m}\int_{T_{ref}}^{T} C_P\,dT = \dot{m}\int_{T_{ref}}^{T}\left(a + bT + cT^2 + dT^3\right)dT \qquad \text{.....(1.23)}$$

Sometimes, you need an estimate of specific enthalpy, specific internal energy, or specific volume at a temperature and a pressure that is between tabulated

values. In this case, one can use a linear interpolation. The following example demonstrates the determination of internal energy from heat capacity.

Example 1.14 Internal Energy and Heat Capacity

A closed rigid vessel that contains 200 kg of a fluid is heated from 20°C to 150°C. Calculate the heat required for this purpose. The constant volume heat capacity of the fluid is given by the following relation:

$$C_v\left(\frac{\text{kJ}}{\text{kg}\cdot{}^\circ\text{C}}\right) = a + bT = 0.855 + 9.42\times10^{-4}T$$

Solution

Known quantities: Mass of fluid, initial (20°C) and final temperature (150°C), heat capacity at constant volume as a function of temperature.

Find: Heat required to heat the content of the closed vessel.

Analysis: Use the general energy balance for a closed system, no change in kinetic and potential energies as the system is a rigid vessel:

$$Q - W = \Delta U$$

W = 0.0 (rigid vessel; no moving part), the change in internal energy is

$$Q = \Delta U$$

The change in internal energy is a function of heat capacity at constant volume; since the heat capacity is a function of temperature and mass, we

$$\Delta U = m\int_{T_1}^{T_2} C_V\,\mathrm{d}T$$

multiply mass by heat capacity as follows:

Substitute the heat capacity at constant volume:
Integrating

$$\Delta U = m\int_{T_1}^{T_2}(0.855 + 9.42\times 10^{-4}T)\mathrm{d}T$$

Integrating the earlier equation as a function of initial and final temperature, we obtain

$$\Delta U = m\left[0.855(T_2 - T_1) + 9.42\times 10^{-4}\left(\frac{T_2^2 - T_1^2}{2}\right)\right]$$

Substituting the values of initial (20°C) and final temperature (150°C),

$$Q = \Delta U = 200\ \mathrm{kg}\left[0.855(150 - 20) + 9.42\times 10^{-4}\frac{(150^2 - 20^2)}{2}\right]$$
$$\times\left[\frac{\mathrm{kJ}}{\mathrm{kg}\cdot{}^\circ\mathrm{C}}\right] = 24{,}312\ \mathrm{kJ}$$

Example 1.15 Use of Data from Tables and Reference State

The data shown in Table E1.15 are for a saturated fluid. Calculate Δh and Δu for the transition of saturated vapor from 10°C to −20°C.

Solution

Known quantities: Enthalpy, pressure, and temperature.

Find: Change of specific enthalpy and specific internal energy.

Analysis: The reference is liquid at −40°C, because the enthalpy at this temperature is zero. Change in specific enthalpy (Δh) and change in specific internal energy (Δu) for the transition of saturated CH3Cl vapor from 10°C to −20°C can be calculated as

$$\Delta h = h_{-20^\circ C} - h_{10^\circ C} = 456 - 470 = -14 \text{ kJ/kg}$$

The change in specific internal energy starts using $h = u + Pv$ and $\Delta h = \Delta u + \Delta(Pv)$.
Rearranging for Δu,

$$\Delta u = \Delta h - \Delta(Pv) = \Delta h - \left\{(Pv)_{-20} - (Pv)_{10}\right\}$$

TABLE E1.15

Properties of Saturated Methyl Chloride

State	T (°C)	P (atm)	v (m³/kg)	h (kJ/kg)
Liquid	−40	0.47	0.001	0.00
Vapor	−20	1.30	0.310	456
Vapor	10	3.54	0.120	470

To calculate the change in internal energy,

$$\Delta u = -14\,\frac{\text{kJ}}{\text{kg}} - \{1.30 \times 0.312 - 3.54 \times 0.12\}\left(\text{atm} \times \frac{\text{m}^3}{\text{kg}}\right)$$

$$\times \left(\frac{101.325 \text{ kN/m}^2}{1 \text{ atm}}\right)\left(\frac{\text{kJ}}{\text{kN} \cdot \text{m}}\right)$$

The rounded result of change in internal energy is

$\Delta u = -12$ kJ/kg

1.3.2 Constant Heat Capacity

Keeping P constant and letting T change, we can get the expression for the constant P part as $\Delta h = \int C_P \, dT \approx C_P \Delta T$ (at constant P). It is not necessary to know the reference state to calculate ΔH for the transition from one state to another. Δh from state 1 to state 2 equals $h2 - h1$ regardless of the reference state upon which $h1$ and $h2$ were based. If different tables are used, one must make sure they have the same reference state. h and u are state properties; their values depend only on the state of the species, temperature, and pressure and not on how the species reached its state. When a species passes from one state to another, both Δu and Δh for the process are independent of the path taken from the first state to the second one.

Example 1.16 Constant Heat Capacity

What is the change in the enthalpy of 100 g/s acid heated in a double pipe heat exchanger from 20°C to 80°C, if the average heat capacity at constant pressure is 0.50 cal/g°C?

Solution

Known quantities: Mass of acid, constant heat capacity, initial and final temperatures.

Find: Change in enthalpy.

Analysis: Use change in enthalpy with constant heat capacity. The change in enthalpy as a function of specific heat is given by

$$\Delta \dot{H} = \int_{T_1}^{T_2} \dot{m} C_P \, dT$$

Since the heat capacity (C_P) is constant, the earlier equation is simplified to

$$\Delta \dot{H} = \dot{m} C_P (T_2 - T_1)$$

Substitute the values of mass flow rate, heat capacity at constant pressure, and difference in temperature (the reference temperature is 20°C):

$$\Delta\dot{H} = \left(100\,\frac{g}{s}\right)\left(0.5\,\frac{cal}{g^\circ C}\right)(80-20)^\circ C = 3000\ cal/s$$

The change in enthalpy transport rate is H = 3.0 kcal/s

Example 1.17 Heat Added to a Boiler

Liquid water is fed to a boiler at 23°C under a pressure of 10 bar, and is converted at constant pressure to saturated steam. Calculate Δh for this process and the heat input required for producing 15,000 m3/h of steam at the exit conditions. Assume that the inlet velocity of liquid entering the boiler is negligible and that the steam is discharged through a 0.15 m ID (inner diameter) pipe (Example Figure 1.17.1). Inlet and exit pipes are at the same level.

Solution

Known quantities: Water inlet conditions (23°C under a pressure of 10 bar), exit steam conditions (10 bar, saturated steam), exit steam volumetric flow rate (15,000 m3/h), exit pipe diameter (0.15 m).

Find: Change in specific enthalpy (Δh).

Analysis: The reboiler is an open system, and the general energy balance equation is

$$Q - W_s = \dot{m}\Delta h + \Delta KE + \Delta PE$$

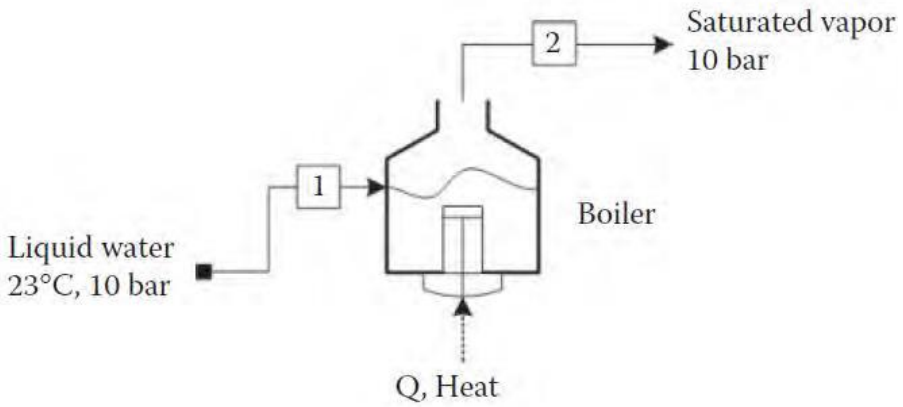

EXAMPLE FIGURE 1.17.1 Production of saturated steam.

Since the reboiler does not deliver shaft work, no change is seen in elevation between inlet and exit steams (change in potential energy is zero); the energy balance equation reduces to

$$Q_s = \dot{m}\Delta h + \Delta KE$$

The change in specific enthalpy: Since no value of specific enthalpy is available at 23°C and 10 bar, the value is taken at 23°C (saturated water):

$$h_1\Big|_{\text{at } 23°\text{C, } 10 \text{ bar}} = 96.2 \text{ kJ/kg}$$

The specific enthalpy value for the exit conditions at 10 bar, saturated steam is

$$h_2\Big|_{\text{at } 10 \text{ bar, sat'd steam}} = 2776.2 \text{ kJ/kg}$$

The change in specific enthalpy,

Is $\Delta h = h_2 - h_1$ Substitute the values of inlet and exit specific enthalpy:

$$\Delta h = 2776.2 \frac{\text{kJ}}{\text{kg}} - 96.2 \frac{\text{kJ}}{\text{kg}} = 2680 \text{ kJ/kg}$$

The discharge mass flow rate (*m*2) is calculated at the exit steam because exit steam volumetric flow rate and diameter of discharge pipe are given. The density is calculated from the inverse of specific volume ($\rho = 1/v$).
The specific volume (v) at 10 bar, saturated steam is 0.1943 m3/kg (used saturated steam table, Appendix A.4):

$$\dot{m}_2 = \rho \times \dot{V} = \frac{1}{0.1943 \text{ m}^3/\text{kg}} \times 15{,}000 \frac{\text{m}^3}{\text{h}} \times \frac{\text{h}}{3600 \text{ s}} = 21.45 \text{ kg/s}$$

The inlet velocity is negligible as given in the problem statement. The exit velocity is calculated from the discharge volumetric flow rate divided by pipe cross sectional area:

$$\upsilon_2 = \frac{\dot{V}_2}{\frac{\pi D^2}{4}} = \frac{15{,}000\ \mathrm{m^3/h}}{\frac{\pi(0.15)^2}{4}\ \mathrm{m^2}} \times \frac{\mathrm{h}}{3600\ \mathrm{s}} = 235.79\ \mathrm{m/s}$$

The simplified general energy balance equation becomes

$$Q = \dot{m}\Delta h + \Delta KE = \dot{m}\Delta h + \frac{1}{2}\dot{m}(\upsilon_2^2 - \upsilon_1^2)$$

Substitute the values of mass flow rate, specific enthalpy, and velocity:

$$Q = 21.45\ \frac{\mathrm{kg}}{\mathrm{s}} \times \left(2680\ \frac{\mathrm{kJ}}{\mathrm{kg}}\right) + \frac{1}{2} \times 21.45\ \frac{\mathrm{kg}}{\mathrm{s}} \left\{\left(235.79\ \frac{\mathrm{m}}{\mathrm{s}}\right)^2 - 0\right\}$$

$$\times \frac{\mathrm{kJ}}{1000\ \mathrm{J}} = 58{,}082\ \ \mathrm{kJ/s}$$

The sign of the heat transfer across system boundaries is positive; that is, heat is transferred from the surroundings to the system.

1.4 Enthalpy Calculations with Phase Changes

The state of a system can be changed, for example, by increasing its temperature or changing its composition. Properties of the system whose change depends only on the initial and final states of the system but not on the manner used to realize the change from the initial to the final state are referred to as state properties [4].

Phase changes, such as evaporation and melting, are accompanied by relatively large changes in internal energy and enthalpy, as bonds

between molecules are broken and reformed. Heat transferred to or from a system, causing change of phase at constant temperature and pressure, is known as latent heat. The types of latent heats are latent heat of vaporization, which is the heat required to vaporize a liquid; latent heat of fusion, which is the heat required to melt a solid; and latent heat of sublimation, which is the heat required to directly vaporize a solid. Heat is released during condensation, and heat is required to vaporize a liquid or melt a solid. Table A.1 reports these two latent heats for substances at their normal melting and boiling points (i.e., at a pressure of 1 atm). Sensible heat refers to heat that must be transferred to raise or lower the temperature of a substance without change in phase as defined earlier. The quantity of sensible heat required to produce a temperature change in a system can be determined from the appropriate form of the first law of thermodynamics. The heat capacity at constant pressure, CP, for most incompressible liquids and solids is equal; $CP \approx Cv$ and for ideal gases, $CP = Cv + R$.

Example 1.18 Enthalpy of Phase Change

Steam at a rate of 100 kg/h is used to heat a stream of gas flowing on the tube side of a heat exchanger. The steam enters the shell side of the heat exchanger as saturated vapor at 10 bar of 90% quality, and exits as saturated liquid water at 10 bar. Calculate the rate of heat transfer to the gas side.

Solution

Known quantities: Inlet (10 bar, 90% quality) and exit (10 bar, saturated water) steam conditions.

Find: The change in enthalpy transport rate.

41

Assumption: No change in potential and kinetic energy, no shaft work.

Analysis: Use the general energy balance equation for an open system around the heat exchanger. The simplified energy balance is obtained as follows.

Energy balance for an open system is

$$\Delta\dot{H} + \Delta KE + \Delta PE = \dot{Q} - \dot{W}_s$$

After including the assumptions, the equation is reduced to

$$\Delta \dot{H} = Q$$

Setting enthalpy transport rate (*H*) in terms of specific enthalpy *h*,

$$\Delta \dot{H} = \dot{m}_s (h_2 - h_1) = Q$$

The change in specific enthalpy of $\Delta h_s = h_{s,2} - h_{s,1}$ steam is

The inlet steam specific enthalpy ($h_{s,1}$) of saturated vapor at 10 bar and 90% quality is

$$h_{s,1}\Big|_{10\text{ bar},\, x=0.9} = h_f + x h_{fg} = 762.6 + 0.9 \times 213.6 = 2574.84 \text{ kJ/kg}$$

The exit steam specific enthalpy at 10 bar, saturated water is

$$h_{s,2}\Big|_{10\text{ bar, sat'd water}} = 762.6 \text{ kJ/kg}$$

$$\Delta h_s = h_{s,2} - h_{s,1} = 762.6 - 2574.84 = -1812.24 \text{ kJ/kg}$$

The rate of heat transfer from condensed steam to gas stream is

$$Q = m_s \Delta h_s = 100 \frac{\text{kg}}{\text{h}} \left(-1812.24 \frac{\text{kJ}}{\text{kg}} \right) \frac{\text{h}}{3600 \text{ s}} = -50.34 \text{ kJ/s}$$

The sign of Q value is negative; that is, heat is transferred from the condensed steam to gas stream.